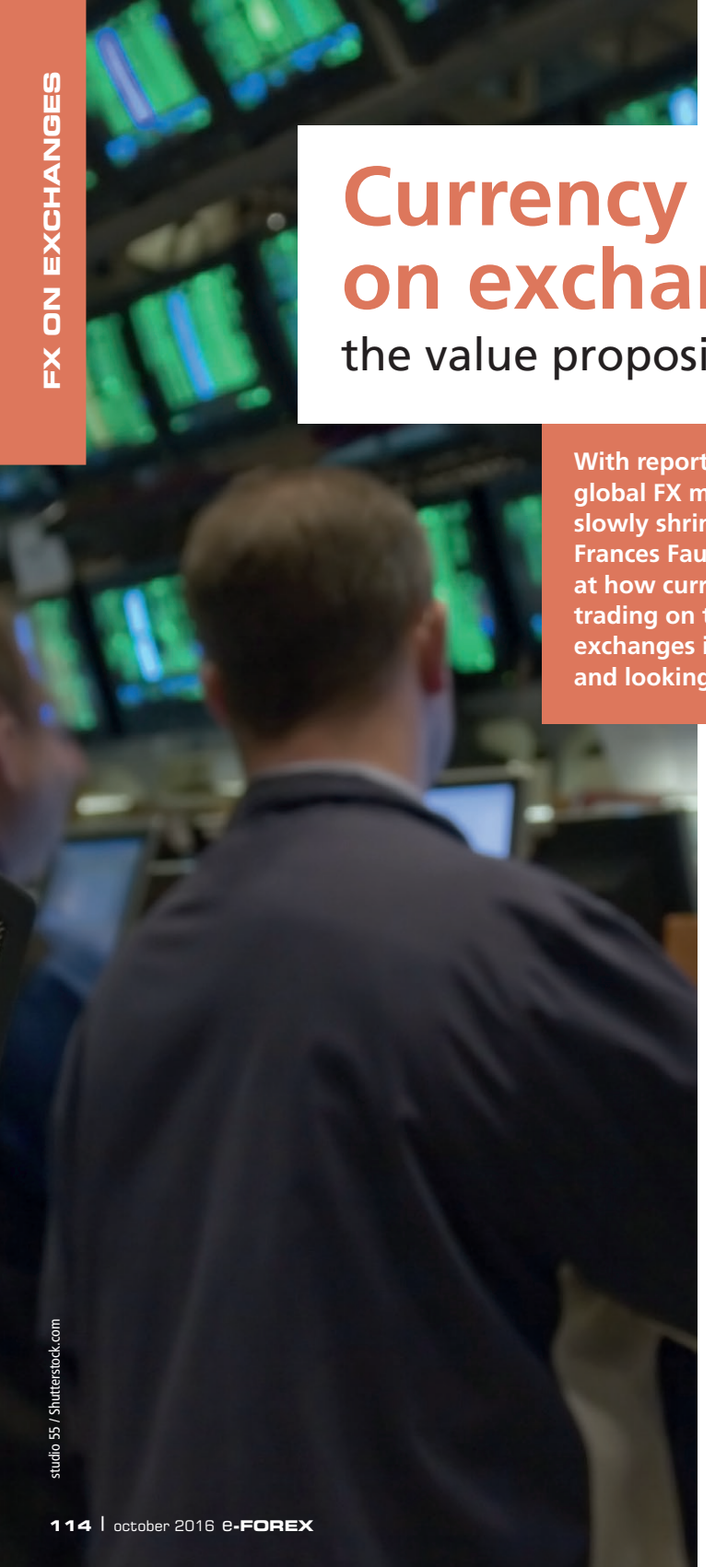

studio 55 / Shutterstock.com

Currency trading on exchanges –

the value proposition strengthens

With reports that the global FX market is slowly shrinking, Frances Faulds looks at how currency trading on the world's exchanges is faring up and looking to grow.

While the days when almost $6 trillion changed hands in the global FX market may be gone, the world's foreign exchange market is slowly adapting to the newly emerging regulatory landscape, post financial-crisis, and continuing to recover from the rate-rigging scandal that erupted in 2013 and the losses that resulted from the surge in the Swiss Franc in 2015.

Higher capital costs for trading OTC products and the rising cost of compliance and credit are shaping today's FX market. At the same time, the world's exchanges are increasing their ranges of FX instruments and services in a bid to mimic the OTC market as far as possible, seeing new record volumes, and opening up market access, while Hong Kong prepares to become the financial centre for the internationalisation of the Renminbi.

In line with the regulatory desire for certain OTC derivatives to be centrally cleared, greater transparency through trading on exchanges or exchange-like facilities and reporting trades, among other reforms, exchanges are seeing a wider spectrum of customers, and adapting their products for wider appeal.

Paul Houston, newly-appointed Executive Director and Global Head of FX at CME Group, says that the range of customers using CME Group futures and options products is continuing to broaden to include banks, non-bank market makers, hedge funds, asset managers, retail, corporates and high net-worth players.

He says: "Central to our value is that we are a primary liquidity source in FX futures and options. We offer firm liquidity on a global basis. Also, at the same time, we are a regulated market place and we offer orderly, equal and transparent trading. This is attractive to all participants so we expect our customer base to continue to grow, particularly as the regulatory and capital benefits of trading listed and OTC cleared products become more pronounced."

More products are in the pipeline to augment this trend, as well as services to attract more transactions onto exchanges as the uncleared margin rules come into effect. Houston says that netting exposures against one counterparty, or one central counterparty for OTC cleared products, bring margin benefits, as well as reducing, or eliminating bilateral credit exposure and the savings from netting are expected to increase further. "The savings from netting will be increased as alongside our margin methodology we have the ability to margin across products," he adds. Offsetting margins across portfolios is only available on exchange. For those facing say, up to ten counterparties, bilaterally, this cannot be done with the same levels of efficiency.

> "Some counterparties may benefit from relationship-based trading but one of our selling points is that we have a clearly identifiable way of treating counterparties and it is the same for all."

Paul Houston

Furthermore, many of the Basel III capital requirements, both those that are already in place and those that continue to filter into the system, offer more favourable treatment for exchange-traded, or OTC-cleared, products. The leverage ratios are lower, exchange-traded products are not subjected to CVA charges, and liquidity coverage ratios are lower due to netting. "Add all these together, as well as the netting, and it makes the savings even greater," Houston says.

In terms of risk management, exchange-traded products are transparently margined, are easily defined, and they are consistent with regulatory best practice. Facing a single counterparty also reduces risk further as well as the lowering of risks that comes from leveraging technology and enabling scalability. "Some counterparties may benefit from relationship-based trading but one of our selling points is that we have a clearly identifiable way of treating counterparties and it is the same for all," Houston adds.

GROWING REGIONAL FOOTPRINT

He also says that CME Group is looking to grow its regional

Currency trading on exchanges – the value proposition strengthens

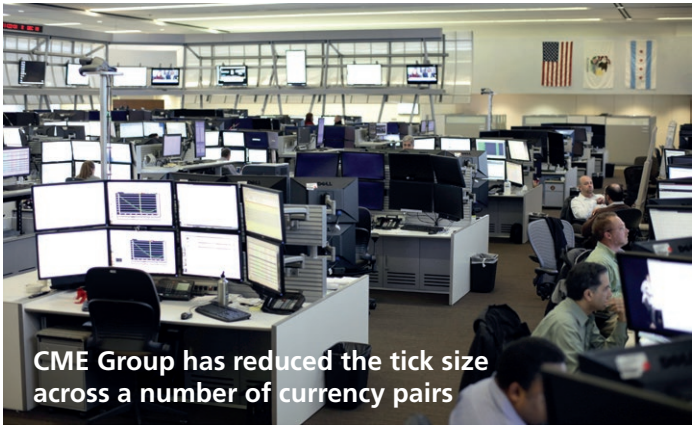

CME Group has reduced the tick size across a number of currency pairs

footprint further. One way is to attract market makers and grow regional liquidity in emerging currencies such as Indian rupee, CNH, Brazil Real, Russian Ruble and Chilean Peso. For emerging market currencies, both listed and OTC-cleared, CME Group contracts conform to EMTA standard fixing sources and fall-backs. Says Houston: "Our core objective is to increase the attractiveness of trading listed FX but without disrupting what we have today."

To this end, CME Group has reduced the tick size across a number of currency pairs, the latest being the CAD/USD in July this year. This follows previous changes to EUR, JPY and MXN. According to Houston, depending on the currency pair and size, this has, on average, reduced the cost of trading listed FX by 30%.

CME Group is also looking at making a number of changes to FX options. The exchange has introduced a number of extra maturities and is in the process of moving to European-style options for FX options and has scheduled a number of other changes for later this year/ Q1 next year to better align the products to OTC users.

In terms of technology, the focus is very much upon improving access to the exchange. Earlier this year, CME Group introduced Market Segment Gateway, which is aimed at simplifying the access the exchange's matching engine by providing a single gateway, to eliminate the variation associated with multiple access points and multiple gateways. "This greatly improves the ease of access to the exchange and there are a number of other initiatives planned for later in the year," says Houston.

As regulatory change continues to impact the marketplace, Houston says the increased cost of trading OTC products is highlighting the advantages of trading on exchange. Increased requirements for best execution are also making asset managers increasingly look at the need for greater transparency and standardisation. And in the FX market as a whole, partly due

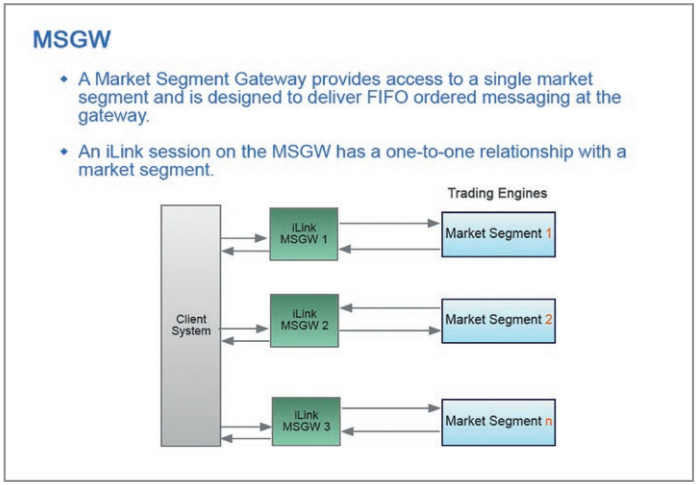

Earlier this year, CME Group introduced Market Segment Gateway

to the regulatory changes but partly due to other factors, the cost of credit has increased. FX prime brokerages are currently reviewing their business models, many of their client bases have been streamlined, the cost of providing this credit service is increased.

According to Houston, these all point to solutions where exchange-traded FX or OTC-cleared FX can assist in meeting some of the pressures experienced by FX market participants.

The Singapore Exchange has also been rapidly expanding its FX derivatives product shelf

DEVELOPMENTS IN ASIA

The Singapore Exchange (SGX) has also been rapidly expanding its FX derivatives product shelf to offer broader coverage of currency pairs and also the type of products available to a broad pool of global investors seeking more exposure into Asian markets. Ivan Han, Director and Head of FX & Rates at SGX, says: "We now offer 15 futures contracts across various Asian currency crosses, and most recently we launched our first listed FX options contract on the Indian rupee. These initiatives serve to meet the changing demands of currency traders today who are placing increased importance on best execution and price transparency."

Efficient market connectivity is also a critical consideration for FX customers today and Han says the exchange is expanding its distribution to a wider base of customers through a strategic collaboration with leading interbank FX platform EBS, which aims to bridge the platforms' respective liquidity pools by providing a single access point for customers to trade both OTC and exchange-traded FX derivatives products. This unique initiative will go live shortly in the fourth quarter of this year.

Says Han: "As we continue to attract an increasingly diverse customer base, this has spurred significant growth in SGX's FX suite of products - volume grew six-fold from under 700,000 contracts in 2014 to 4.2 million contracts traded in 2015."

In June 2016, SGX's Indian rupee futures contract achieved new record trading volumes with over US$800 million in notional value traded per day, while the exchange's offshore Renminbi futures contract has grown rapidly to become the most liquid exchange for CNH futures products.

For Han, changes in regulatory policies are continuing to drive a number of conversations surrounding the economics of the prime brokerage model and where clients can get cost efficient access to credit and FX liquidity.

He says: "The past 18 months have seen a significant reduction in credit and risk appetites, with many traditional FX liquidity providers such as market-making banks being reined in by regulatory requirements such as margin rules for uncleared swaps and capital penalties. The consequence of this risk aversion is less 'internalisation', and subsequently higher trading costs for counterparties across the board."

As a result, he says that the equation of cleared versus uncleared in relation to counterparty risk mitigation and cost efficiency has also changed

for market participants, which is pushing both end users and intermediaries to look at potentially using standardised/cleared products traded on exchanges to plug the gaps for some parts of the FX market (e.g. Asian NDFs).

Han also believes that technology is becoming increasingly commoditised and helping to level the playing field. "We are seeing buy-side market participants becoming increasingly tech-savvy in terms of getting direct connectivity into exchanges where they have the capability to use automated or algorithmic trading strategies to increase the quality of their FX execution and rapidly scale up their trading activities."

ACCESS TO CHINA

With Hong Kong entering a new phase as a leading international financial centre as the world's interaction with Mainland China's markets and investors are being transformed, the internationalisation of the Renminbi (RMB) has given the Hong Kong Exchanges and Clearing (HKEX), a unique opportunity to entrench Hong Kong as a gateway for cross-border fund flows and as a risk management venue.

Already, the value proposition of trading FX on the exchange has been recently strengthened with the addition of a greater number of currency futures contracts. In May this year, HKEX expanded its range of RMB currency futures to include EUR/CNH, JPY/CNH, AUD/CNH and CNH/USD contracts to its USD/CNH contract.

While HKEX's original USD/CNH futures contract is physically settled, all the new currency futures are cash settled. They have been introduced in response to increasing demand in the region for bi-lateral risk management and cross-currency hedging tools, as well as the domestic policy shift that resulted in RMB movement being tracked against multiple currencies. The CNH/USD future, which is margined and settled in US dollars, was launched to complement HKEX's USD/CNH future, with reduced cost of funding.

HKEX is currently focusing on fine-tuning its business, technology and trading attributes in a bid to become the marketplace of choice for currency players in Asia, and around the world. HKEX's trading and clearing platforms are scheduled for system enhancements to upgrade their accessibility and functionality and its RMB currency futures market now also offers block trade

360T echoes shift to exchanges

360 Trading Networks, acquired by Deutsche Börse Group last year, has been working closely for some months with Eurex Exchange to improve and expand its listed FX derivatives products.

While some of the Eurex-listed futures and options contracts are gaining traction, Alfred Schorno, Managing Director 360T Group, says that it is clear that some aspects of the product definition, especially the trading times available at present, do not suit a global market.

Work is underway to change this. In September, more currencies including Yen, Australian and New Zealand dollar, were added to the product range, and contract specifications continue to be improved to make the contracts more suitable to today's market conditions, such as changing the tick sizes to align the contracts better with the OTC market and reducing block sizes.

Bigger changes are in the pipeline. In 2017, Eurex will extend its trading hours for FX, as well as launch a Rolling Spot Future. Schorno says "This will position the Deutsche Börse Group as a strong competitor in the FX market."

"We have always wanted to satisfy the interest of FX clients in a European product. A number of European clients, end-users like asset managers and exchange traded funds (ETFs), say they would actually prefer to trade original European contracts where possible, rather than with US products that have just been copied into London."

Eurex, which is now Europe's biggest futures and options exchange, first went live with FX futures and options in July 2014. The contracts were designed to combine best-practice OTC market conventions with the transparency of exchange-traded and centrally cleared contracts in response to the changing regulatory treatment of OTC instruments.

Says Schorno: "Times have changed. FX clients are looking for something which is more 'controllable'. We have a number of asset manager customers who, due to these numerous discussions around best execution in the OTC market, are considering using on-exchange products for the spot and then swapping the transactions to forwards for their clients, simply to get around the WM 4pm fixing issue. We see a totally different dynamic in the market today compared to when discussions about a rolling spot product and additional on-exchange products first started in Europe some years ago."


Alfred Schorno

"We see a totally different dynamic in the market today compared to when discussions about a rolling spot product and additional on-exchange products first started in Europe some years ago."

Going forward, 360T's client base will enjoy having an unparalleled breadth of product choice with OTC and exchange-traded FX alongside each other, with an additional separate CLOB (OTC central limit order book) complementing this with its rulebook well-tailored for 360T clients' needs.

360T and Eurex are keen to complete the range of trading execution mechanisms, including OTC RFQ, RFS, executable streams, anonymous OTC trading including a central limit order book, plus rolling spot and classic styled futures – both on-exchange as well as off-book negotiated block and EFP functions soon.

"We are spending time with our clients helping them plan for a future where they have choice of what product and execution style they can or should use for the trade they need to do," adds Schorno.

The next 12 months will see 360T and the German exchange continuing to position themselves as a viable alternative to the OTC market and, following the outcome of the recent Brexit vote in the UK, a serious contender in the provision of a European-based exchange-traded FX product.

"As we continue to attract an increasingly diverse customer base, this has spurred significant growth in SGX's FX suite of products "


Ivan Han

functionality, to provide greater over-the-counter flexibility with minimal counterparty risk.

Julien Martin, Head of FIC Product Development in the Market Development group at HKEX, says: "The greatest benefit of trading on exchange is offered through margining, which significantly reduces the upfront capital commitment required, as well as central clearing, which reduces counterparty risk through a central counterparty that handles transaction of many different buyers and sellers."

HKEX's RMB currency futures are designed to meet investor demand for offshore RMB trading and risk management and the addition of the new contracts is to meet the different needs of market participants, in particular those with cross-currency exposure, whether it is in assets, liabilities or cash flow. They follow the international foreign exchange convention of month-end expiry, with the final settlement date set on the third Wednesday of each month (subject to any holiday adjustment). In addition, the USD/CNH futures offer eight tenors that cover up to 16 months, facilitating long-dated risk management of market hedgers.

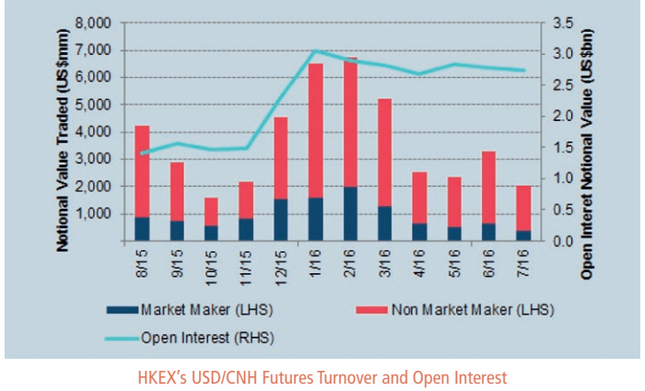

HKEX's USD/CNH Futures Turnover and Open Interest

Traded continuously from 9am – 4.30pm, RMB currency futures are also among the few products that trade in the after-hours futures trading session, from 5:15 pm to 11:45 pm, which aligns HKEX with the onshore market and facilitates price discovery. The contracts are easily accessible through a wide range of more than 100 licensed brokers from international and local backgrounds.

HKEX regularly reviews its platforms and microstructure to maintain market integrity and efficiency in accordance with international principles. Examples of this include the introduction of its Volatility Control Mechanism (VCM) for selected securities in August, which will later include key stock index futures, to safeguard market integrity with a 5-minute period of trading in a price range after a spike in the price of a product covered by the mechanism.

The value proposition has also been strengthened by growing trading volume and open interest. Since 2013, the first full year of trading for HKEX's USD/CNH futures contract, average daily volume more than tripled to 1,882 in August this year, with open interest standing at 27, 808 contracts.

Martin says: "HKEX's RMB currency futures are part of a strategy to provide international RMB currency products for trading and risk management as Mainland China becomes more engaged in external investment and further opens its financial markets, and the currency's internationalisation continues."

HKEX sees this as a unique opportunity to build price discovery capabilities, benchmarks and risk management tools in fixed income, currency and commodities, asset classes in which Mainland Chinese and international liquidity will increasingly converge.

HKEX set up OTC Clearing Hong Kong (OTC Clear), one of its four clearing houses in Hong Kong, to providing clearing and settlement services for OTC derivative transactions and complement its listed derivatives offering. OTC Clear currently provides clearing of inter-dealer interest rate swaps, non-deliverable currency forwards and cross currency swaps (CCS). The CCS service began last month. OTC Clear is initially providing clearing for swaps in the USD/CNH currency pair.

CHANGING THE MODEL

For Igor Marich, Managing Director of Money and Derivatives Market and Member of the Executive Board of the Moscow Exchange (MOEX), the role of the exchange in the FX market is changing alongside users' needs. He says: "We see that on the global FX market, increasing numbers of buy-side investment funds, corporates and individuals require direct access to FX marketplaces with competitive execution and reliable post-trade services. Russia is in line with this trend. In the past few years the traditional MOEX FX market model has been transformed from an interdealer market to a broker-agency model, which is more oriented to end-users."

"Any highly capitalised large exchange group such as MOEX has an obvious advantage over any single trading platform."

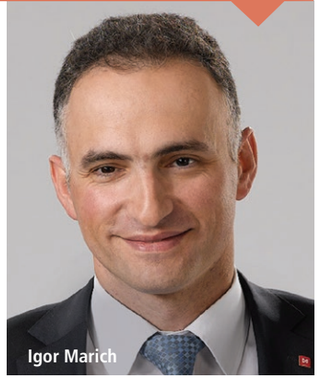
Igor Marich

He adds that MOEX is expanding beyond its domestic market by attracting international non-resident banks, and their clients, foreign high-frequency traders, funds and buy-side customers, to trade on the exchange, given that it is the largest global FX marketplace for trading the Russian Ruble against foreign currencies. Non-resident clients make up 70% of the clients' spot turnover and increase their activity.

The MOEX FX Market offers a wide range of instruments to different categories of end users, both institutional investors and individuals, and in the first six months of this year, the FX Market had over 700,000 registered clients with end-client turnover accounting for more than 60% of the total spot turnover, up from 25% two years ago.

Earlier this year, the exchange made several innovative changes to its products to meet client needs. To manage client risk, trading accounts are now registered for second and third tier clients, giving brokers access to the exchange's risk management tools and allowing them to keep records of clients' positions. Settlement and collateral nettings are available under the settlement account in which the positions of different clients are recorded. MOEX continues to roll-out segregated accounts to end clients, strengthening the clients' protection.

Currency trading on exchanges – the value proposition strengthens

The MOEX FX Market offers a wide range of instruments to different categories of end users

CCP WITH A DIFFERENCE

Furthermore, Marich says the unique offering developed by MOEX is attracting users worldwide. FX trading venues worldwide provide only order matching while clearing and settlement are performed by member firms directly through their correspondent accounts, or via big settlement banks or a clearing bank, such as CLS, on a multilateral basis. MOEX provides a full range of post-trade services with regard to FX trades.

"This is the major distinction from other marketplaces. Such services include trade settlement guarantee from the central counterparty, the NCC Clearing Bank (the qualified CCP), which is part of Moscow Exchange Group. The CCP bears the default risk associated with on-exchange trades. Sophisticated risk management practices and sufficient capital adequacy of NCC guarantee obligations will be met - the main feature of the on-exchange foreign currency market in Russia," he adds.

Marich says that MOEX's CCP's services include a sophisticated risk management system and that the Russian exchange is also working on a number of projects to make members' operations more convenient and efficient. In July, MOEX launched risk balancing between the Derivatives Market and FX Market to facilitate reduced collateral and increased trading volumes. Participants will also soon be able to reduce their costs with a unified collateral pool across all MOEX markets and with portfolio margining to be launched next year.

More than 80 of MOEX's 500 member firms now provide Sponsored Market Access or Direct Market Access (SMA/DMA) to their clients and today, a total of 55,000 clients trade on MOEX's FX Market using this service. With a trading day lasting 14 hours, participants from almost all regions of Russia (which covers 11-time zones) are able to trade effectively and implement different strategies including arbitrage in similar instruments across trading venues.

But while the Moscow Exchange focuses on RUB currency pairs, most banks and their clients still prefer USD to convert currencies. In fact, the MOEX share in overall USD/RUB trading is steadily growing and made 64% in July. Total ADV in all instruments made USD 20 bln for first 6 months of 2016.

A recent addition to the exchange's product range is the new currency pair, CHF/RUB, for spot trading, with T0 and T+1 settlement, which was launched following requests from the exchange's member firms. As a supplement, Marich says that this instrument will be used to calculate risk parameters for CHF-denominated bonds, in order to admit these bonds to repo with the CCP and make the currency eligible as collateral.

Deliverable futures contracts on the USD/RUB, EUR/RUB and CNY/RUB currency pairs with fixed settlement dates were also launched in July 2016. Says Marich: "This allows market participants to reduce their margin requirements by

offsetting FX and derivatives positions and avoid paying double margin rate. The new deliverable futures have facilitated arbitrage between the MOEX's FX and Derivatives Markets and improved hedging efficiency, especially for large players such as banks and non-residents."

The exchange is rapidly gaining international recognition. In March 2016, MOEX's indices and FX fixings were recognised as IOSCO-compliant and in July 2016, its USD/RUB benchmark, MOEX USD/RUB FX FIXING, was recommended by the Emerging Markets Traders Association (EMTA) as the major settlement reference rate for OTC rouble derivatives (NDFs, NDOs) for its OTC FX members. CME Group will also use MOEX USD/RUB FX FIXING for its RUB-denominated currency futures.

Says Marich: "After recognition of MOEX USD/RUB Benchmark by EMTA member-banks and CME, we expect that global Rouble NDFs will migrate to the MOEX FX market with their share projected to reach 50% of the total market turnover by 2020. Moscow Exchange will benefit from an expanded client base and increased turnover."

For this reason, Marich says the exchange is engaged in discussions about an initiative to create direct FX trading links with large global international FX platforms to deliver MOEX FX RUB order book liquidity to non-resident clients of such platforms.

The Central Bank of Russia (CBR) has officially recognised Moscow Exchange's USD/RUB FX Fixing

According to Marich, improvements made to the client access facility in the first six months of 2016 have stimulated activity of market participants and extended an investment base due to new categories of clients such as non-residents, Russian and international brokerages, corporates and individuals.

Marich says: "Any highly capitalised large exchange group such as MOEX has an obvious advantage over any single trading platform. The advantage includes the ability to offer pre-trade and post-trade services (counterparty and settlement risk management in the form of secured settlement via its clearing house) in addition to common price discovery and trade execution. The exchange covers the major portion of the domestic FX turnover and ensures safe settlement via the central counterparty at the best available price. Due to liquidity concentration within the exchange, the spread is narrower, thereby making it almost impossible to find better prices. The convenience of operating on the regulated market is worth more than the fee charged by the exchange."

CONCLUSION

While the exchanges continue to prove their value, the real cost of trading in this newly emerging landscape remains to be seen, with the final framework for Basle III still unfolding and the higher capital requirements and margining for OTC instruments still taking effect. This value proposition will be further improved when the effects of netting and margin offsets can be fully realised as the FX market moves away from using bilaterally cleared instruments and towards central clearing.